CHAPTER 3: RELIABILITY EVALUATION OF k-OUT-OF-n AND STANDBY SYSTEMS

- In practice, there exist systems, which require the successful operation of at least k, $1 \leq k \leq n$ components out of n identical components. Such systems are known as *k-out-of-n systems* or *partially redundant* systems.
- Further, in parallel systems discussed previously, all n components work simultaneously, while for successful operation of a parallel system only one needs to work successfully. This is known as *active redundancy*.
- The redundancy complementary to active redundancy is known as the *standby (passive) redundancy*.

3.1 REDUNDANCY

- Redundancy in a system means that there exists an alternative parallel path for the successful operation of the system.
- For example, suppose a system has n components connected in parallel and at least k, $1 \leq k \leq n$ components are needed for the successful operation of the system. In such a system, we say that the number of *basic components* is k and the remaining $(n-k)$ components are known as *redundant* components.

- The basic purpose of introducing redundant components in a system is to improve the reliability of the system. Redundancy can be classified as shown in Fig. 15.1.

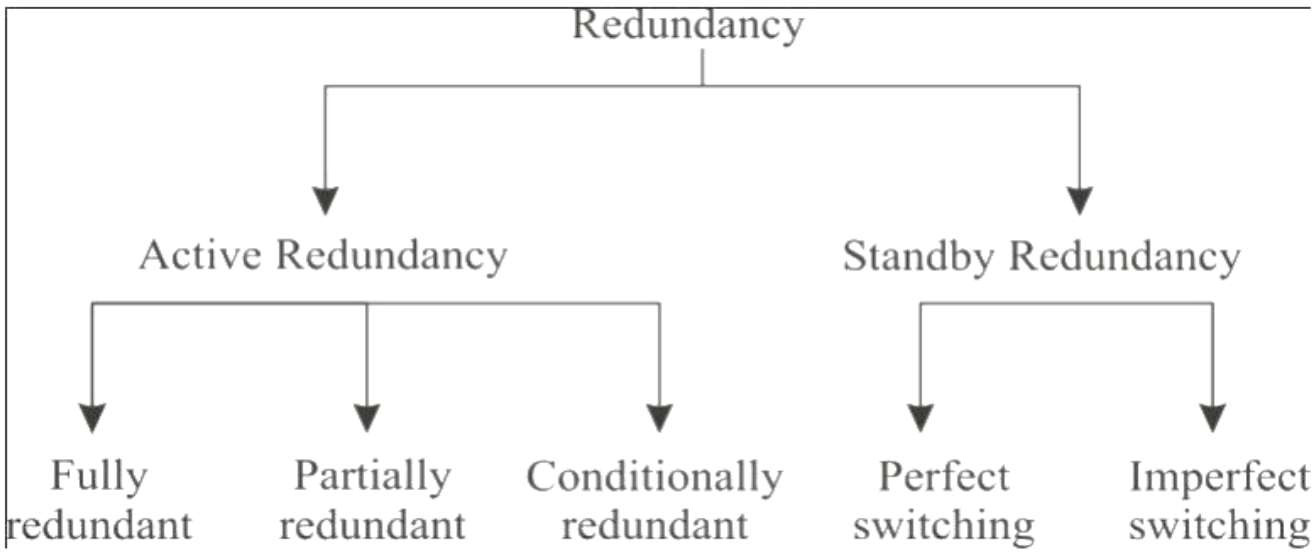

Fig. 15.1: Classification of redundancy.

- ***Fully Redundant System:*** A k-out-of-n system is known as a ***fully redundant*** system if k = 1. But for k = 1, the k-out-of-n system is the same as the parallel system. Thus, the parallel system is nothing but a 1-out-of-n system and is also known as a ***fully redundant*** system.

- ***Partially Redundant System:*** Before defining a partially redundant system, let us first define a non-redundant system. A k-out-of-n system is said to be a ***non-redundant system*** if k = n. But for k = n, the k-out-of-n system is simply the series

system. Thus, a series system is nothing but an n-out-of-n system and is also known as a ***non-redundant*** system. Now, we define a partially redundant system. A k-out-of-n system is said to be a ***partially redundant system*** if $1 < k < n$

3.2 RELIABILITY OF k-OUT-OF-n SYSTEM

- A system having n components is said to be k-out-of-n system if and only if at least k components out of n are required to function successfully for the successful operation of the system.
- In k-out-of-n system, although all n components are in operation, the k components that are essential for the system to operate are called the ***basic components***.
- The $(n-k)$ components that are added with the objective to improve the reliability of the system are known as ***redundant components***.
- Thus, a series system is an n-out-of-n system and a parallel system is a 1-outof-n system. That is, the series and parallel systems are particular cases of k-out-of-n system when $k = n$ and $k = 1$, respectively. The possible paths for a 2- out-of-3 system having components 1, 2 and 3 are shown in Fig. 15.2

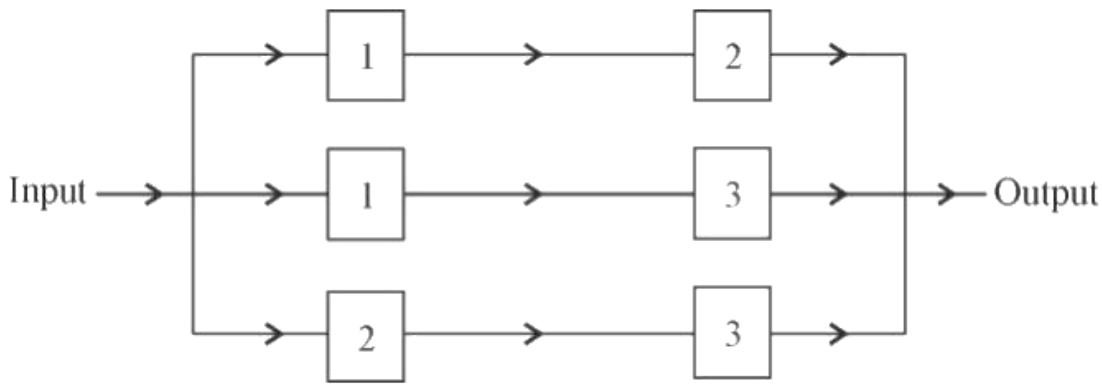

Fig. 15.2: Possible paths for 2-out-of-3 system.

R_s denotes the reliability of k-out-of-n system for a given time, then

R_s = Probability of success of at least k components

$$\text{or } R_s = \sum_{x=k}^{n} {}^{n}C_x \, R^x Q^{n-x}, \qquad \ldots (2)$$

where

n = number of components in the system,

k = minimum number of components required for the success of the system,

R = reliability of each component,

Q = 1 – R = unreliability of each component. … (3)

Example 1: Consider a piping system having 5 pipes connected in parallel as shown in Fig. 15.3. Assume that all pipes are identical and independent. If reliability of smooth flow of the liquid from each pipeline is 0.80 for a mission of 1 year, evaluate the reliability of the system working successfully. The system is said to work successfully if at least 3 pipelines perform their intended function successfully.

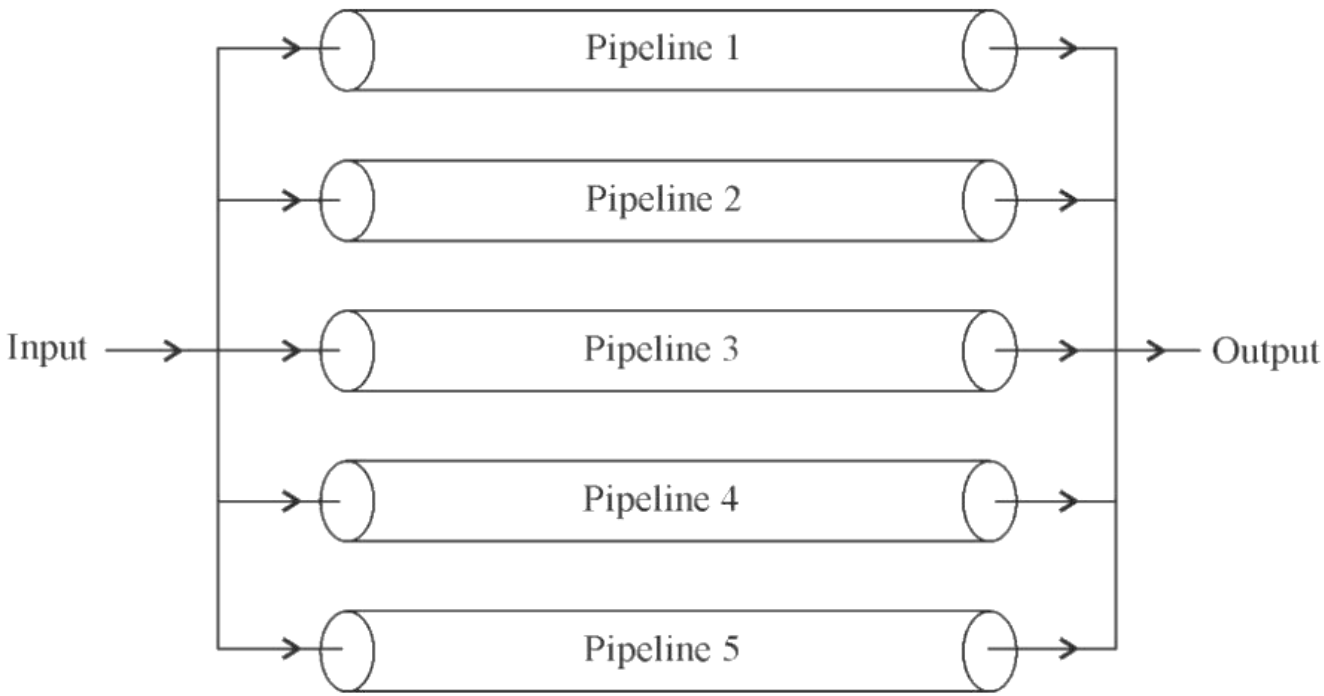

Fig. 15.3: System of 5 pipelines connected in parallel.

Solution: Since it is given that for successful operation of the system, at least 3 pipelines should work successfully, it is a k-out-of-n system, where k = 3 and n = 5.

If R denotes the reliability of each pipeline and R_s that of the 3-out-of-5 system, then applying the binomial distribution given in equation (2), we get

$$R_s = \sum_{k=3}^{5} {}^5C_k \, R^k (1-R)^{5-k}$$

$$= {}^5C_3 R^3 (1-R)^2 + {}^5C_4 R^4 (1-R) + {}^5C_5 R^5 (1-R)^0$$

$$= 10(0.8)^3(1-0.8)^2 + 5(0.8)^4(1-0.8) + (0.8)^5$$

$$= 10 \times 0.512 \times 0.04 + 5 \times 0.4096 \times 0.2 + 0.32768$$

$$= 0.2048 + 0.4096 + 0.32768$$

$$= 0.94208 \qquad \text{for a mission of 1 year}$$

Example 2: For the system given in Example 1, assume that instead of 5 pipelines, we have 4 pipelines, which are independent but not identical. It is given that the reliabilities of 4 pipelines for a mission of 1000 hours are $R_1 = 0.60$, $R_2 = 0.70$, $R_3 = 0.80$ and $R_4 = 0.75$, respectively. Evaluate the reliability of 2-out-of-4 system.

Solution: Here we are given that k = 2 and n = 4. Since the components (pipelines) are non-identical, we cannot apply the binomial distribution in this case. This is because one of the requirements for applying the binomial distribution is that the probability of success in each trial should be the same. This requirement is not met in this case due to the presence of non-identical components. The case of non-identical components is handled by considering all possible mutually exclusive and exhaustive cases for each possible value of k. Here the values of k may be 2, 3 or 4. Let us find the mutually exclusive and exhaustive cases for each value of k one at a time. This is explained below:
For k = 2,

the number of mutually exclusive cases = the number of ways of exactly 2 successes out of 4

$$= {}^4C_2 = \frac{\lfloor 4}{\lfloor 2 \lfloor 4-2} = \frac{4 \times 3 \times \lfloor 2}{2 \times \lfloor 2} = 6$$

These six mutually exclusive cases are $R_1R_2\bar{R}_3\bar{R}_4, R_1\bar{R}_2R_3\bar{R}_4,$ $R_1\bar{R}_2\bar{R}_3R_4, \bar{R}_1R_2R_3\bar{R}_4, \bar{R}_1R_2\bar{R}_3R_4, \bar{R}_1\bar{R}_2R_3R_4,$ where $\bar{R}_i$ denotes the unreliability of the component i, i = 1, 2, 3, 4. These mutually exclusive cases are shown in Fig. 15.4a.

For k = 3,

the number of mutually exclusive cases = the number of ways of exactly 3 successes out of 4

$$= {}^4C_3 = \frac{\lfloor 4}{\lfloor 3 \lfloor 4-3} = \frac{4 \times \lfloor 3}{\lfloor 3 \times 1} = 4$$

These four mutually exclusive cases are $R_1R_2R_3\bar{R}_4, R_1R_2\bar{R}_3R_4, R_1\bar{R}_2R_3R_4,$ $\bar{R}_1R_2R_3R_4$ as shown in Fig 15.4b.

For k = 4,

the number of mutually exclusive cases = the number of ways of exactly 4 successes out of 4

$$= {}^4C_4 = \frac{\lfloor 4}{\lfloor 4 \lfloor 4-4} = \frac{\lfloor 4}{\lfloor 4 \times \lfloor 0} = 1 \text{ as } \lfloor 0 = 1$$

There is only one possibility of 4 successes out of 4, which is $R_1R_2R_3R_4$. This case of 4 successes is shown in Fig. 15.4c.

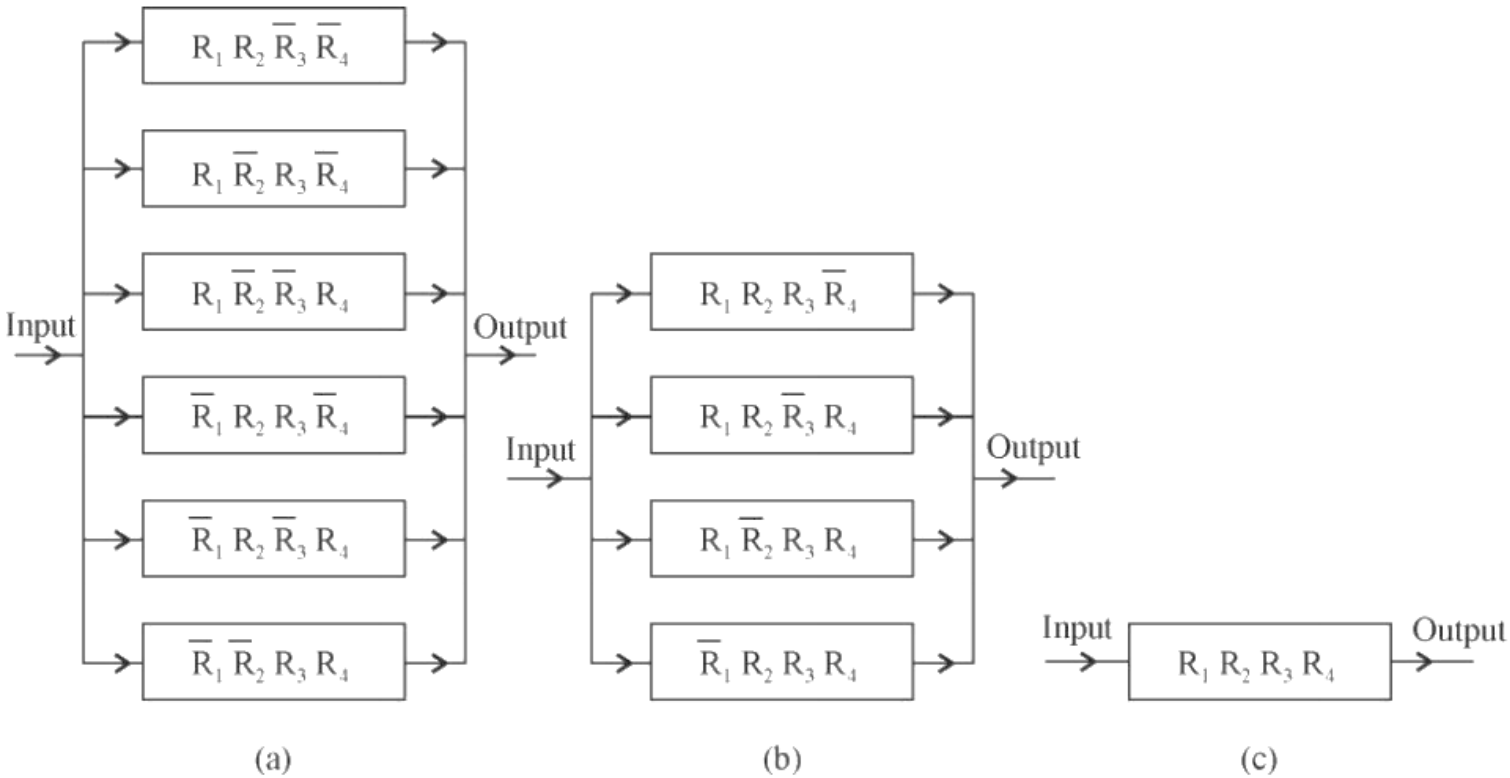

Fig. 15.4: Mutually exclusive paths for (a) k = 2; (b) k = 3 and (c) k = 4.

Let R_a, R_b and R_c denote the reliabilities for the cases when k = 2, k = 3 and k = 4, respectively.

Now, to evaluate reliability for k = 2, we simply have to add the reliabilities of the six mutually exclusive cases as shown in Fig. 15.4a (by addition law of probability for mutually exclusive events).

$$\begin{aligned}
\therefore R_a &= R_1R_2\bar{R}_3\bar{R}_4 + R_1\bar{R}_2R_3\bar{R}_4 + R_1\bar{R}_2\bar{R}_3R_4 + \bar{R}_1R_2R_3\bar{R}_4 \\
&\quad + \bar{R}_1R_2\bar{R}_3R_4 + \bar{R}_1\bar{R}_2R_3R_4 \\
&= 0.6\times0.7\times(1-0.8)(1-0.75) + 0.6\times(1-0.7)0.8(1-0.75) \\
&\quad + 0.6\times(1-0.7)(1-0.8)\times0.75 + (1-0.6)\times0.7\times0.8(1-0.75) \\
&\quad + (1-0.6)\times0.7(1-0.8)0.75 + (1-0.6)(1-0.7)0.8\times0.75 \\
&= 0.6\times0.7\times0.2\times0.25 + 0.6\times0.3\times0.8\times0.25 + 0.6\times0.3\times0.2\times0.75 \\
&\quad + 0.4\times0.7\times0.8\times0.25 + 0.4\times0.7\times0.2\times0.75 + 0.4\times0.3\times0.8\times0.75 \\
&= 0.021 + 0.036 + 0.027 + 0.056 + 0.042 + 0.072 \\
&= 0.254
\end{aligned}$$

$$\begin{aligned}
R_b &= R_1R_2R_3\bar{R}_4 + R_1R_2\bar{R}_3R_4 + R_1\bar{R}_2R_3R_4 + \bar{R}_1R_2R_3R_4 \\
&= 0.6\times0.7\times0.8(1-0.75) + 0.6\times0.7(1-0.8)0.75 + 0.6(1-0.7)0.8\times0.75 \\
&\quad + (1-0.6)0.7\times0.8\times0.75 \\
&= 0.084 + 0.063 + 0.108 + 0.168 \\
&= 0.423
\end{aligned}$$

$$R_c = R_1 R_2 R_3 R_4 = 0.6 \times 0.7 \times 0.8 \times 0.75 = 0.252$$

The reliability of the whole system is given by

$$R = R_a + R_b + R_c = 0.254 + 0.423 + 0.252 = 0.929$$

Work to do:

E1) For the system given in Example 1, evaluate the reliability of the system for k = 1, 2, 3, 4, 5 and comment on the results.

3.3 RELIABILITY OF STANDBY SYSTEM

- Refer to Fig. 15.1, where we have classified redundancy broadly into two categories, namely, active redundancy and standby redundancy.
- By active redundancy, we mean that all the components connected in parallel are turned on at the beginning of operation of the system, and continue to perform until they fail. Thus, in active redundancy, all components are simultaneously in the operating mode. Such systems include, the parallel system and k-out-of-n system, where all the components of the system are turned on at the beginning of the operation of the system. So all the components are simultaneously in the operating mode

- On the other hand, in standby redundancy, the components are connected in parallel but do not start operating simultaneously from the beginning of the operation of the system. In ***standby redundancy,*** the component(s) in operating mode, is/are known as ***normally operating component(s)***. The component(s) kept in standby or reserve mode is/are known as ***standby component(s)***.
- Other than this, there is a changeover device. The function of the changeover device is to sense the failure of normally operating component and in case of a failure, to bring a standby component into the normal operating mode.

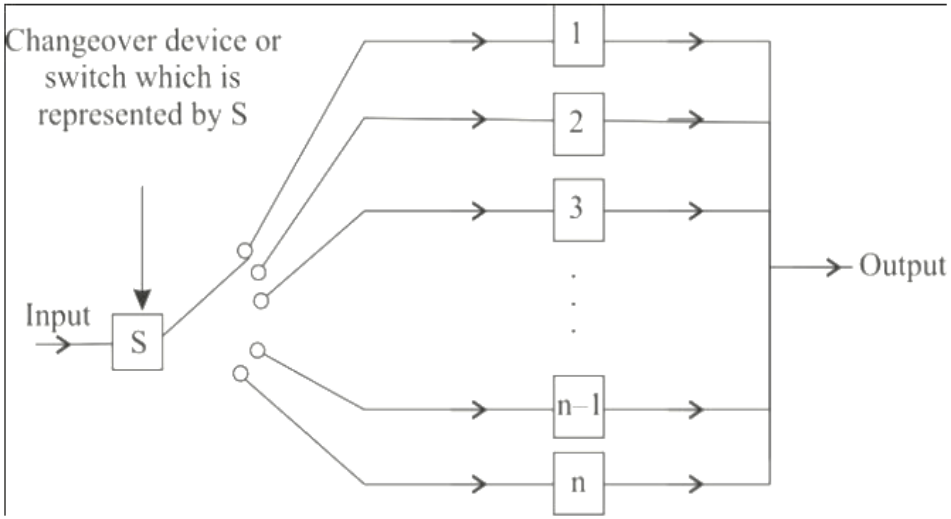

Fig. 15.6: A typical n components standby stystem for the case of only one component in normally operating mode.

- Initially the switch is connected to component 1 and turns it on (see Fig. 15.6). Here we are assuming that only one component is in the normally operating mode. Until the component 1 performs its intended function successfully, the

remaining (n–1) components, namely 2 to n, remain in the standby (reserve or inoperative) mode.

- As soon as component 1 fails, the switch senses the failure and turns component 2 on. Till such time as the component 2 performs its intended function successfully, the remaining (n–2) components, namely 3 to n, remain in the standby (reserve or inoperative) mode.
- As soon as component 2 fails, the switch senses the failure and turns the component 3 on. This process continues until the failure of the nth component. When the nth component fails, the system will go into failure mode.
- In the discussion so far, we have not considered a key point of the standby system: that the switch itself may fail during the operation of a component or during the time of changeover of a normally operating component to a standby component. Due to this feature of the standby system, we divide the discussion of this section under the following two heads:
    - Standby system with perfect switching, and
    - Standby system with imperfect switching.

2.6.1 Standby System with Perfect Switching

By perfect switching, we mean that the changeover device/switch will neither fail during the operation of a component nor during the changeover of a failed component to the next available standby component. In reliability terms, we are assuming that the changeover device is 100% reliable. To evaluate the reliability of the standby system with perfect switching, we assume that the standby component(s) will not fail in its/their standby position. Now, let E_i be the event that component i performs its intended function successfully, where i = 1, 2, 3, …, n. Let Q_i denote the unreliability of the component i, given that components $1 \text{ to } (i-1)$ have failed. Further, if R and Q denote the reliability and unreliability of the standby system, then

$$Q = P\left(\bar{E}_1 \cap \bar{E}_2 \cap \bar{E}_3 \cap \ldots \cap \bar{E}_n\right), \text{ where } \bar{E}_i \text{ denotes complement of event } E_i$$

$$= P\left(\bar{E}_1\right) P\left(\bar{E}_2 \middle| \bar{E}_1\right) P\left(E_3 \middle| \bar{E}_1 \bar{E}_2\right) \ldots P\left(\bar{E}_n \middle| \bar{E}_1 \bar{E}_2 \ldots \bar{E}_{n-1}\right) \qquad \ldots (4a)$$

[using the concept of conditional probability]

$$= Q_1 Q_2 Q_3 \ldots Q_n \qquad \ldots (4b)$$

$\therefore$ reliability (R) of the standby system is given by $R = 1 - Q$ … (5)

In particular, in the case of one normally operating component and one standby component, the unreliability of the system is given by

$$Q = Q_1 Q_2 \qquad \ldots (6)$$

and reliability (R) of the standby system is given by equation (5).

Note1: Here the unreliability Q_2 of the component 2 is not the same as it is in the case of parallel system because in a standby system, component 2 is used for a shorter duration as compared to the case of parallel system.

Example 3: A standby system has three components 1, 2, 3, where component 1 is normally operating and components 2, 3 are standby components. The reliability of component 1 is 0.95. The reliability of component 2 given that component 1 has failed is 0.96 and that of component 3 given that components 1 and 2 have failed is 0.98. Evaluate the reliability of the system under the assumption that the switch is perfect.

Solution: We know that for an n-component standby system (with one normally operating component), if Q_i is the unreliability of component i given that components 1 to $(i-1)$ have failed, then reliability (R) of the system is given by

$$R = 1 - Q_1 Q_2 Q_3 \ldots Q_n$$

In this case,

$$Q_1 = 1 - 0.95 = 0.05, \quad Q_2 = 1 - 0.96 = 0.04, \quad Q_3 = 1 - 0.98 = 0.02$$

$$\therefore R = 1 - Q_1 Q_2 Q_3$$

$$= 1 - (0.05)\,(0.04)\,(0.02) = 1 - 0.00004 = 0.99996$$

2.6.2 Standby System with Imperfect Switching

By imperfect switching, we mean that the changeover device/switch may fail either during the operation of a component or during the time of bringing a standby component in place of a normally operating failed component. To explain the concept, let us consider a simple two-component standby system with one normally operating component (say, A) and one standby component (say, B). To evaluate the reliability of the system, let us assume that the switch fails only at the time of changeover. Therefore, the unreliability of the system is given by

$$Q = P(\text{successful changeover}) \times P(\text{system failure given successful changeover})$$

$$+ P(\text{unsuccessful changeover}) \times P(\text{system failure given unsuccessful changeover})$$

$$\Rightarrow Q = P_s Q_A Q_B + \overline{P}_s Q_A, \quad \left[\begin{array}{l} \because \text{in case of successful changeover, system} \\ \text{failure} \Rightarrow \text{A fails and then component B fails.} \\ \text{In case of unsuccessful changeover, system} \\ \text{failure} \Rightarrow \text{failure of component A.} \end{array}\right] \quad ...(7)$$

where,

P_s = probability of successful changeover

$\overline{P}_s = 1 - P_s$ = probability of unsuccessful changeover

Q_A = unreliability of component A

Q_B = unreliability of component B given that component A has failed

Example 4: Consider a two-component standby system with A as normally operating component and B as standby component. The reliability of component A is 0.90 while the reliability of component B given that A has failed is 0.95. Assume that the switch can fail only at the time of changeover with a probability of failure 0.03. Evaluate the reliability of the system.

Solution: We know that if

P_s = probability of successful changeover

$\overline{P}_s = 1 - P_s$ = probability of unsuccessful changeover

Q_A = unreliability of component A

Q_B = unreliability of component B given that component A has failed

then from equation (7), the unreliability (Q) of the two-component standby system under the assumption that the switch can only fail during the time of changeover is given by

$$Q = P_s Q_A Q_B + \overline{P}_s Q_A$$

$$= (1-0.03)\times(1-0.90)(1-0.95) + 0.03\times(1-0.90) \quad \text{[using given reliabilities]}$$

$$= 0.97\times0.10\times0.05 + 0.03\times0.10 = 0.00485 + 0.003 = 0.00785$$

Hence, the reliability of the system = 1 – 0.00785 = 0.99215

E2) If in Example 2, the probability of unsuccessful changeover is 0.25 instead of 0.03, evaluate the reliability of the system.